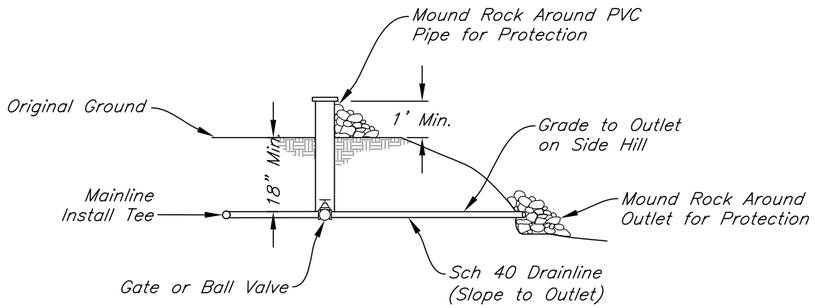

TYPICAL DRAIN INSTALLATION
FOR SHALLOW BURY PIPELINES

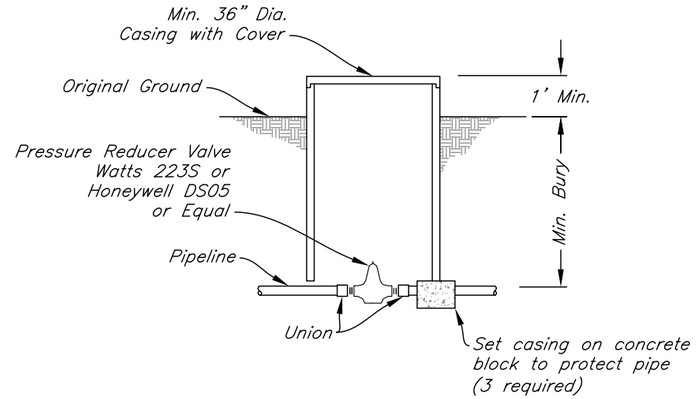

TYPICAL PRESSURE REDUCER
INSTALLATION

Pipeline Appurtenance List		
Station	Valve Type	Riser

See Design Plan Sheet

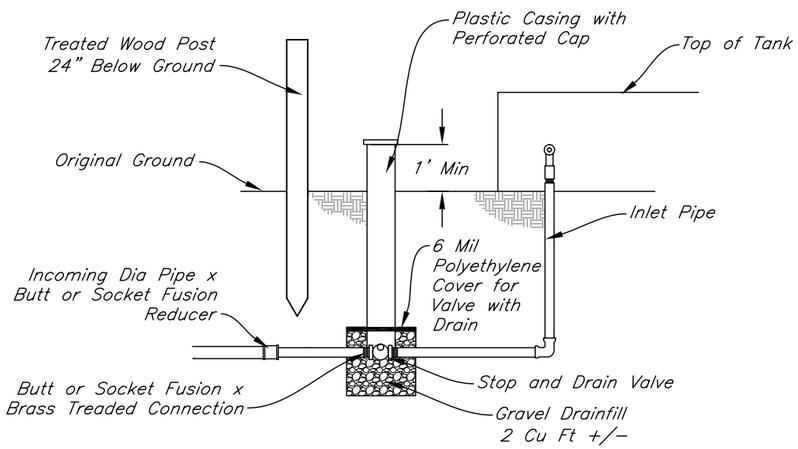

TYPICAL STOP AND DRAIN INSTALLATION

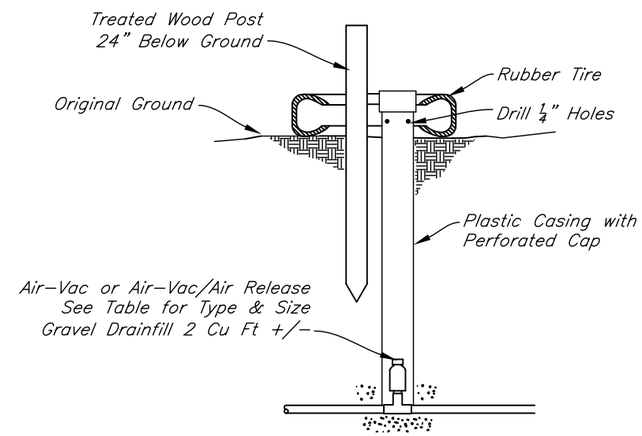

AIR/VAC RELIEF VALVE DETAILS

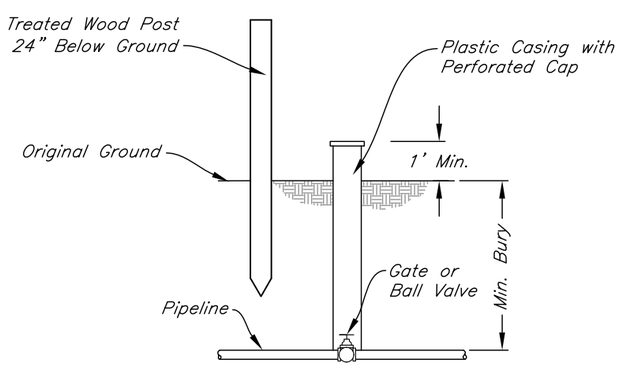

TYPICAL GATE OR BALL
VALVE INSTALLATION

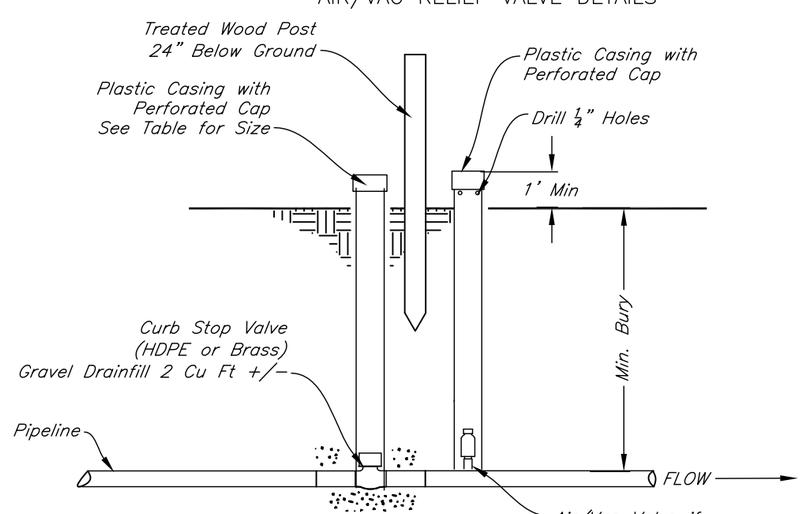

CURB STOP DETAIL
No Drain- On High Point

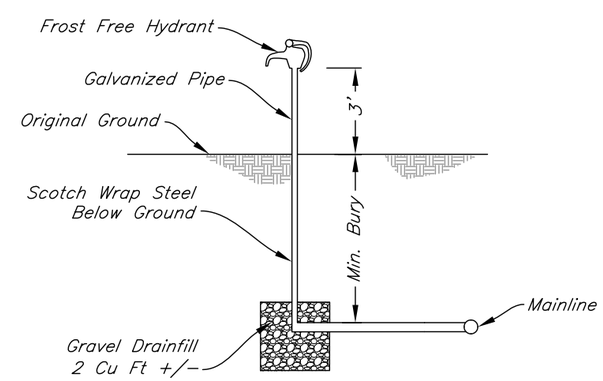

TYPICAL HYDRANT INSTALLATION

NOT TO SCALE

Date
Designed
Drawn Cassie Ahmed 03-22-2024
Checked
Approved

PIPELINE APPURTENANCES

OWNER:
COUNTY:

United States Department of Agriculture
Natural Resources Conservation Service

File Name
ND-DWG-141

Date
03-22-2024

Sheet of